Robots « pick-and-place » comment aller plus vite

BRUNO BELZILE, PHD, ING. JR

JOURNÉE DE LA RECHERCHE – FRQNT

16 MAI 2018, QUÉBEC

McGill
Centre for
Intelligent Machines

Outline

1. Pick-and-place robots
2. Peppermill Carrier
3. Cylindrical drives
4. Trajectory planning
5. PMC control
6. Future steps

Parallel kinematic machine (PKM)
Adept Quattro s650H
(H4 architecture)

Serial robot
ABB SCARA

Pick-and-place robots

Schönflies-motion generators

Four degrees-of-freedom (DOF)
- X (translation)
- Y (translation)
- Z (translation)
- Φ (rotation)

Adept test cycle
- On the market
  - 3 Hz
- In the lab
  - 4-6 Hz

Pick-and-place robots

Applications

- Moving a payload between workstations
- Packaging
- Assembly
- Food processing

Peppermill Carrier (PMC)

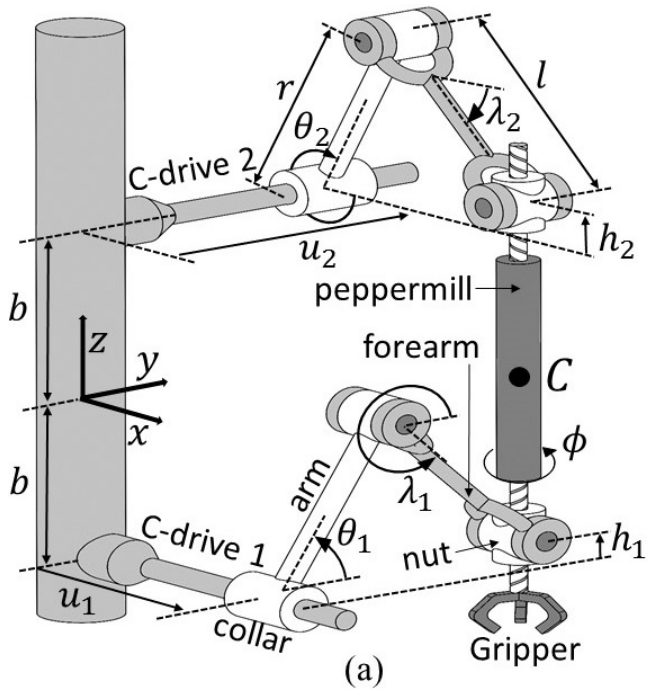

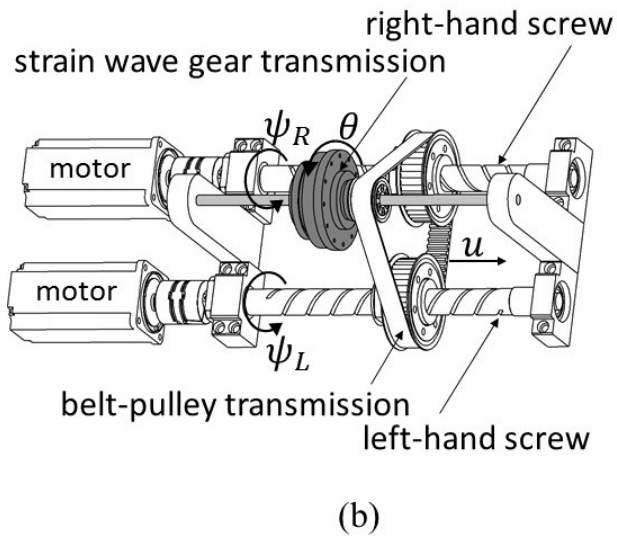

Peppermill Carrier

Isostatic

Quasi-infinite rotation of the EE

No interference throughout the entire workspace

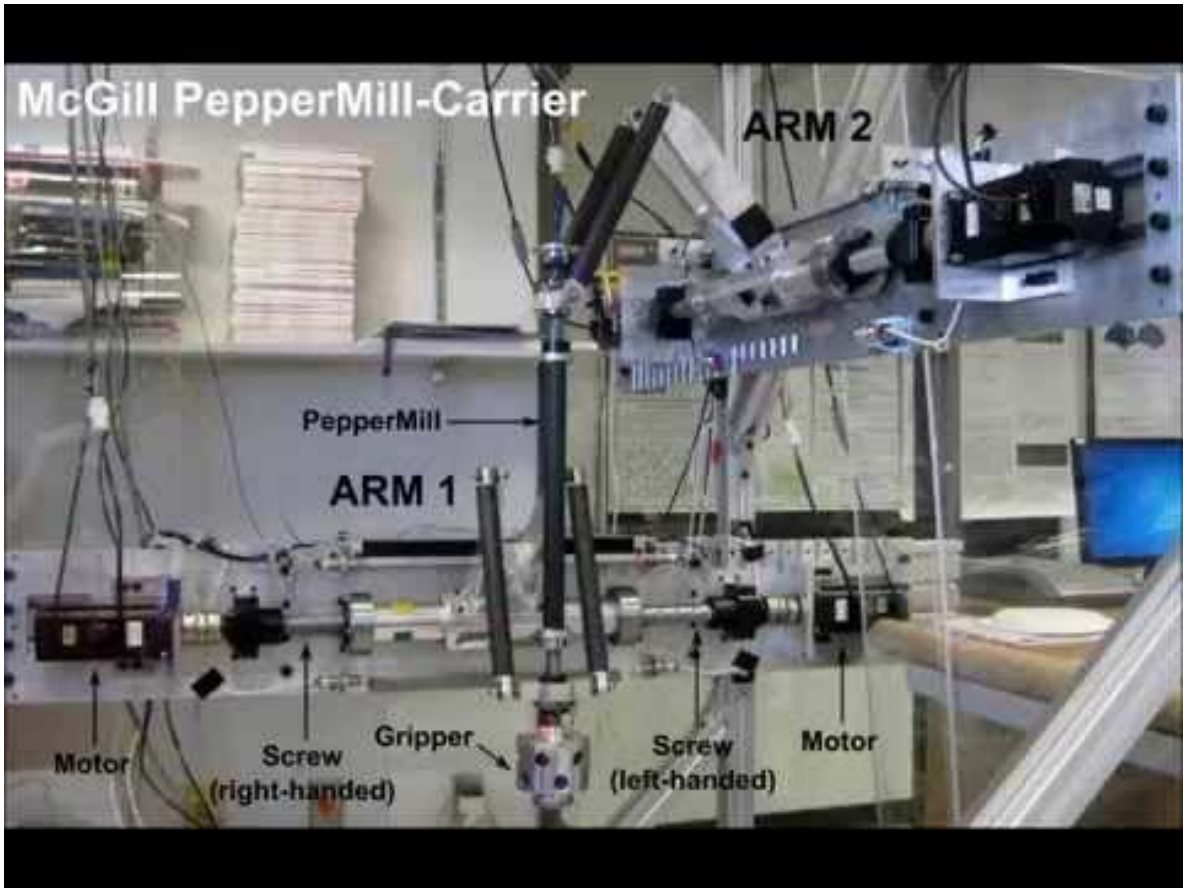

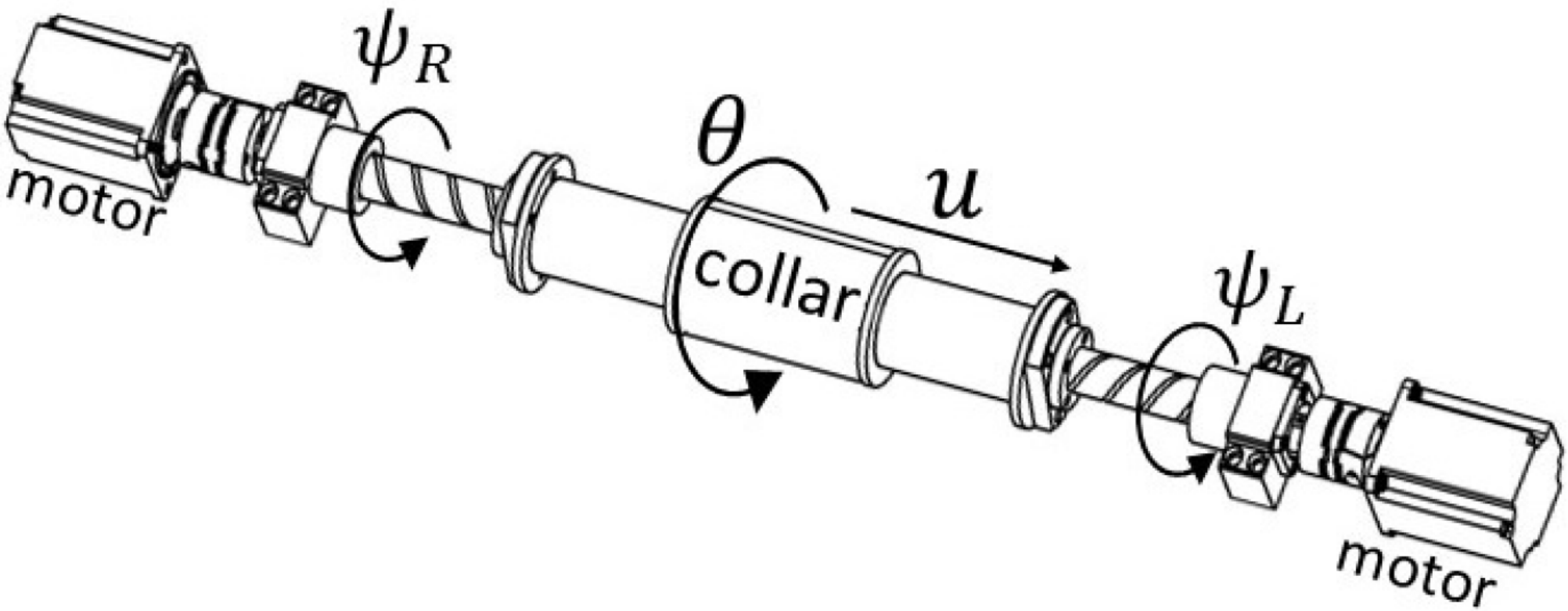

Cylindrical drive – first iteration

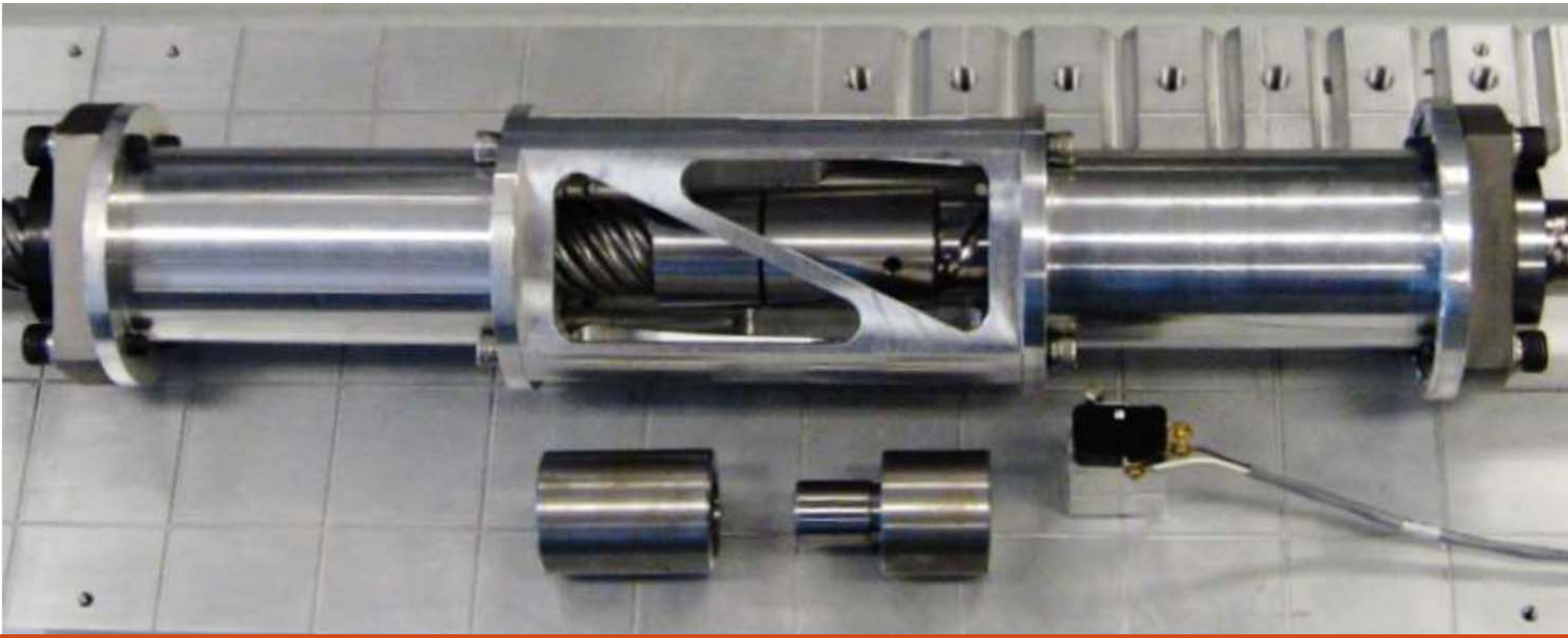

Cylindrical drive – first iteration

Cylindrical drive second iteration

cable-driven

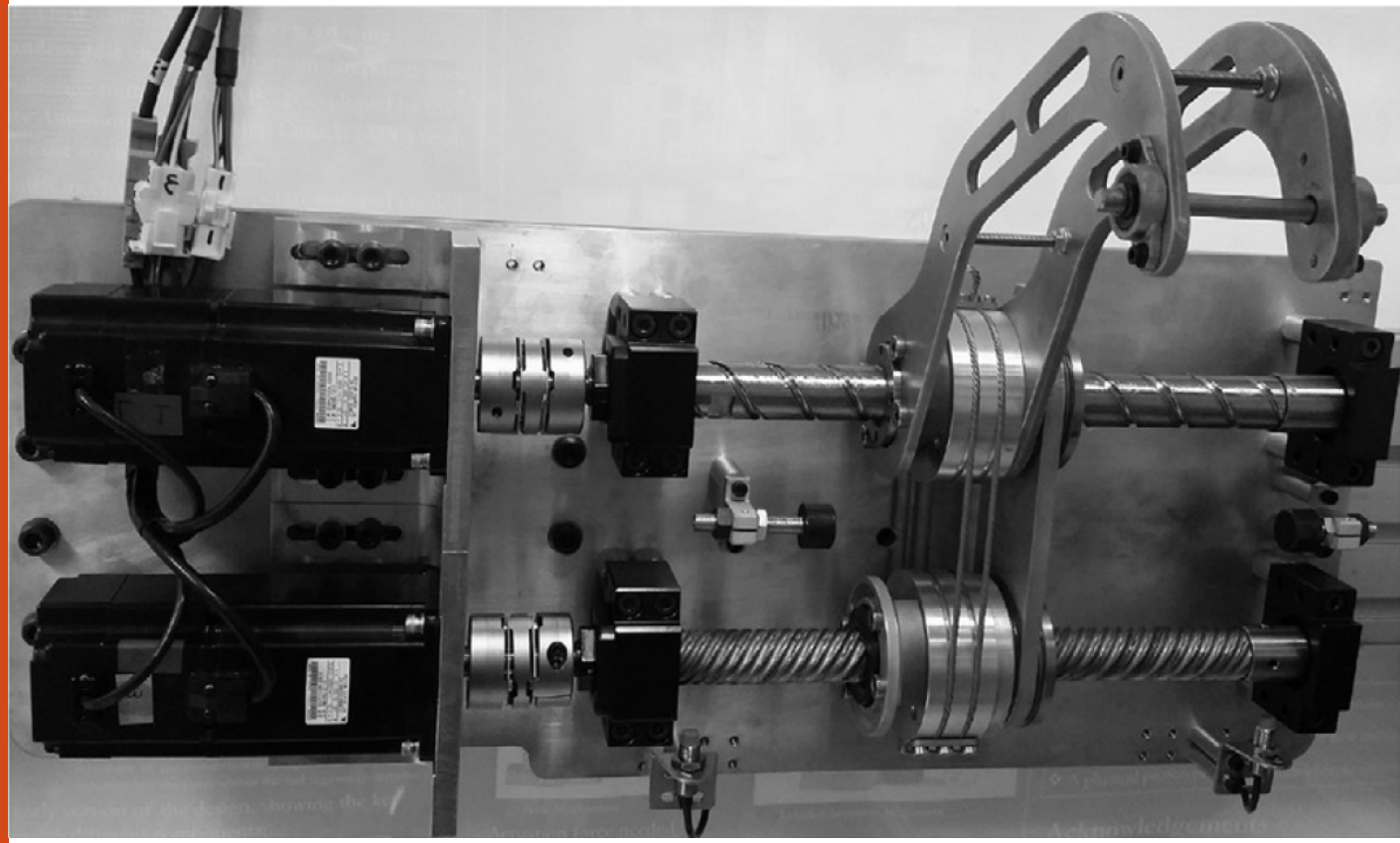

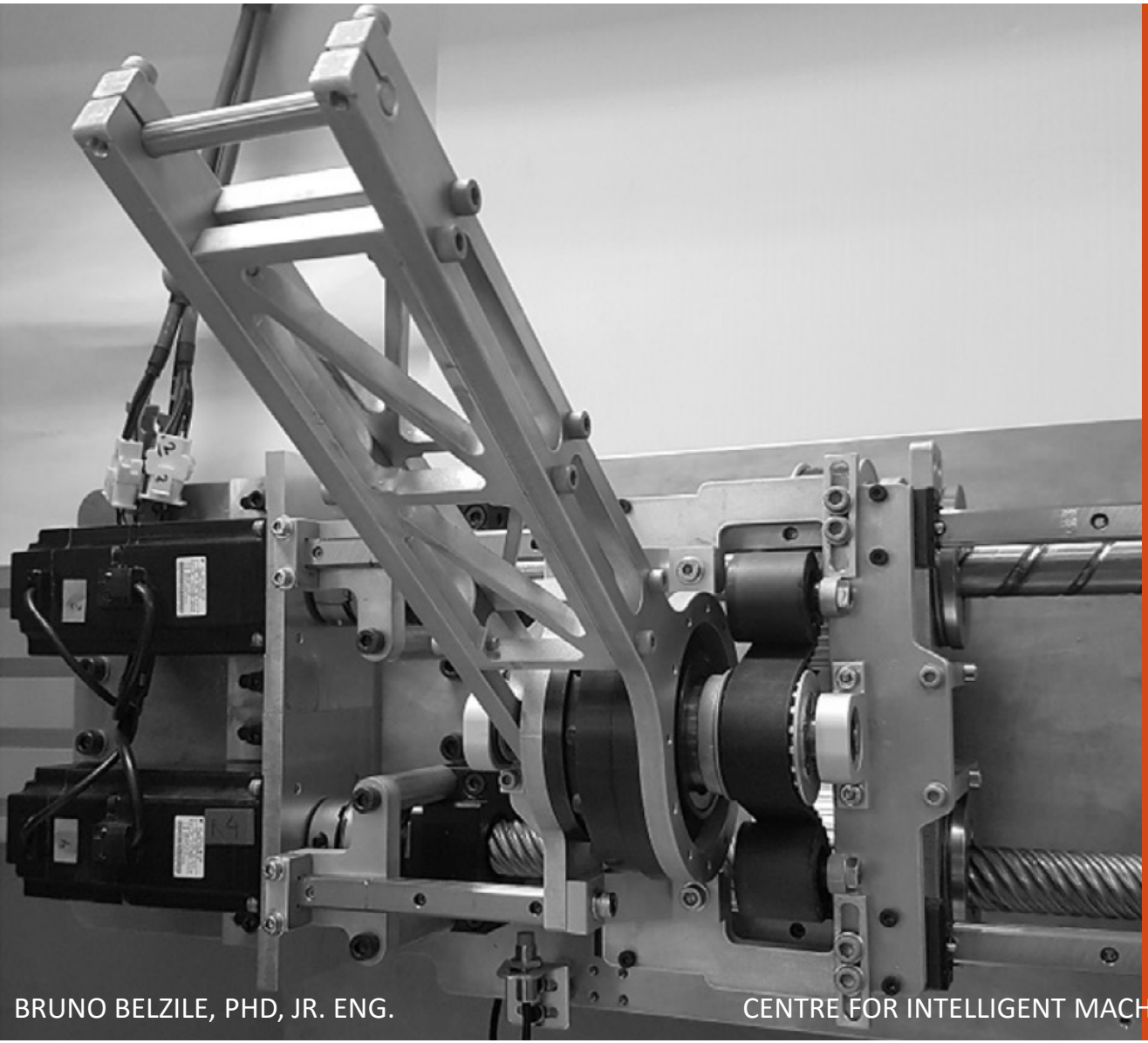

Cylindrical drive third iteration

translative π-joint

C-drive – third iteration

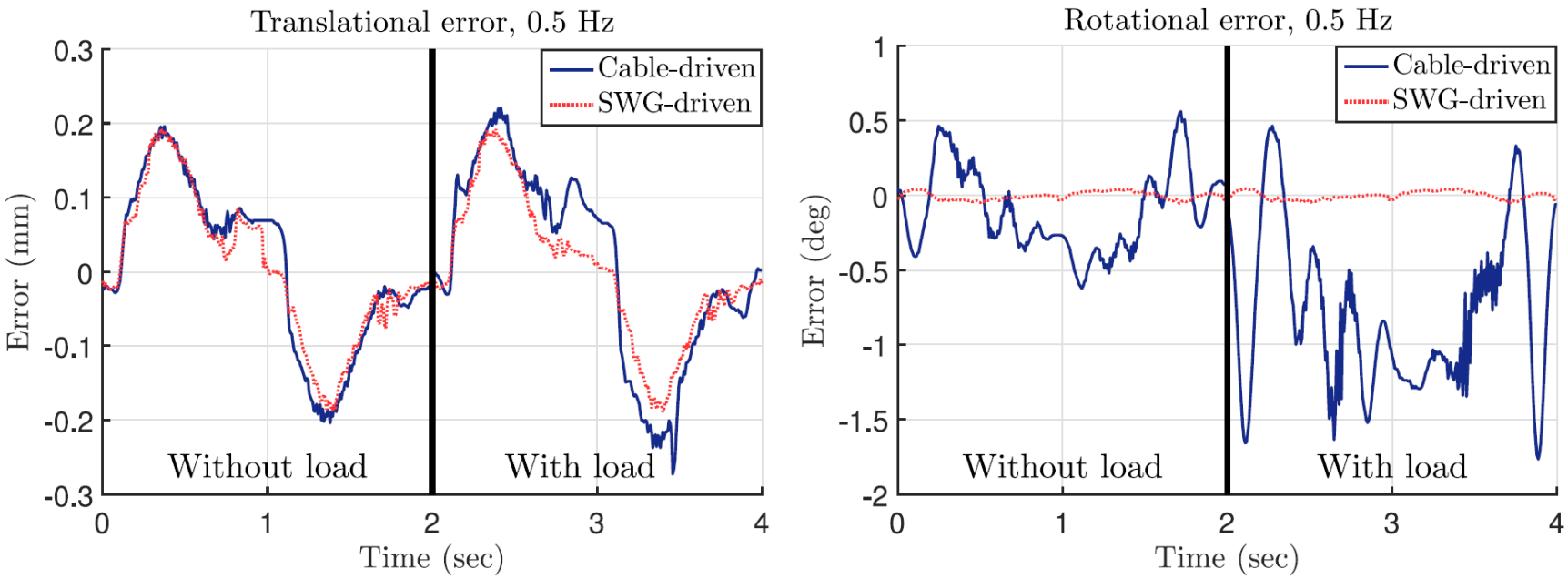

(a) (b)

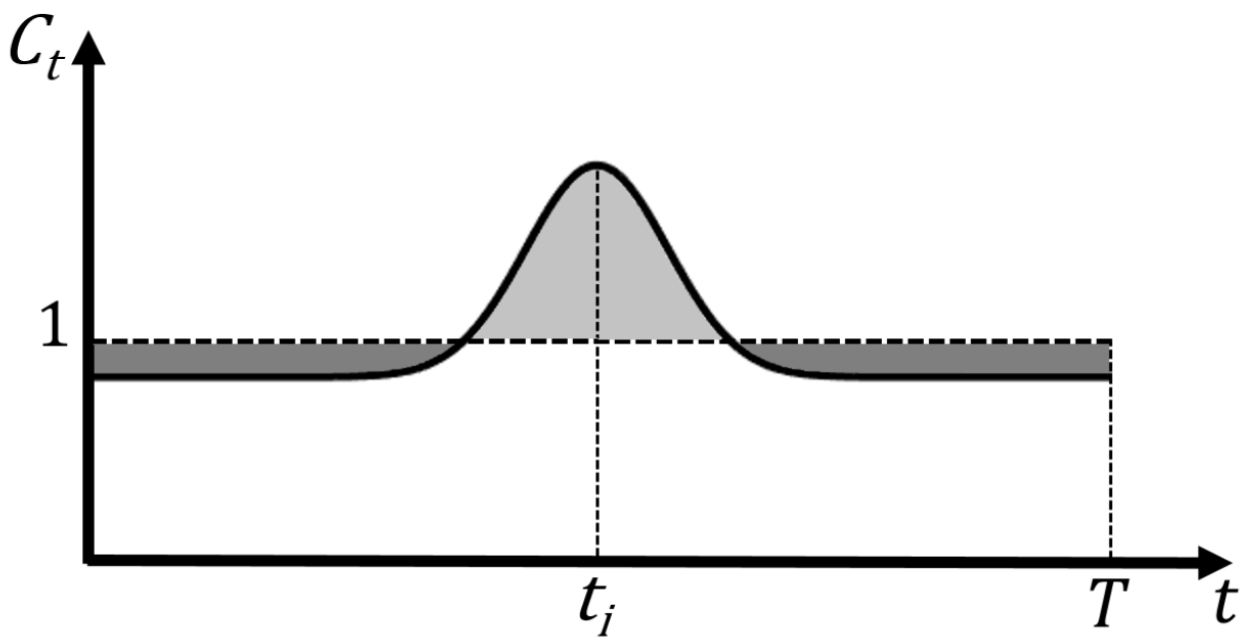

Trajectory planning

Velocity scheduling

Same smoothed trajectory

Torque peaks reduced with time-scaling function.

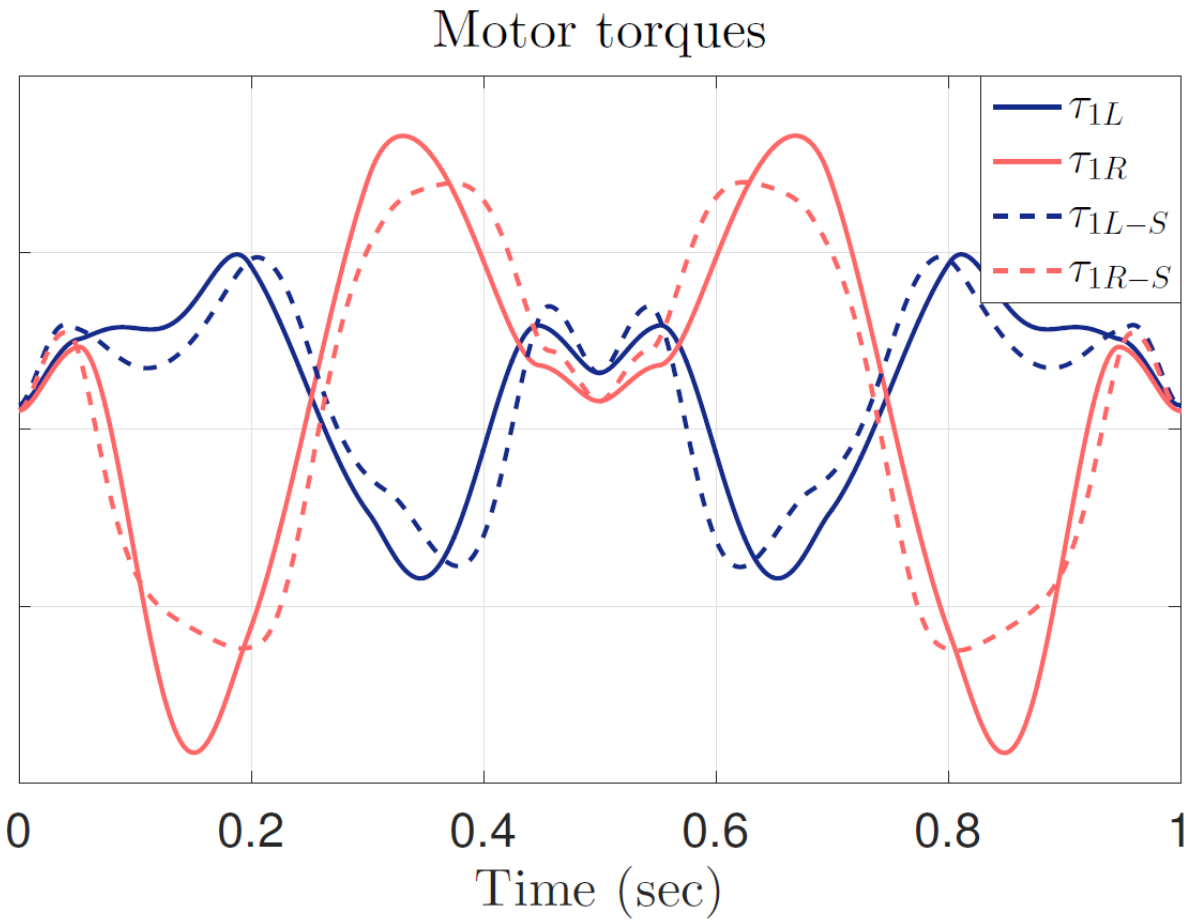

Trajectory planning

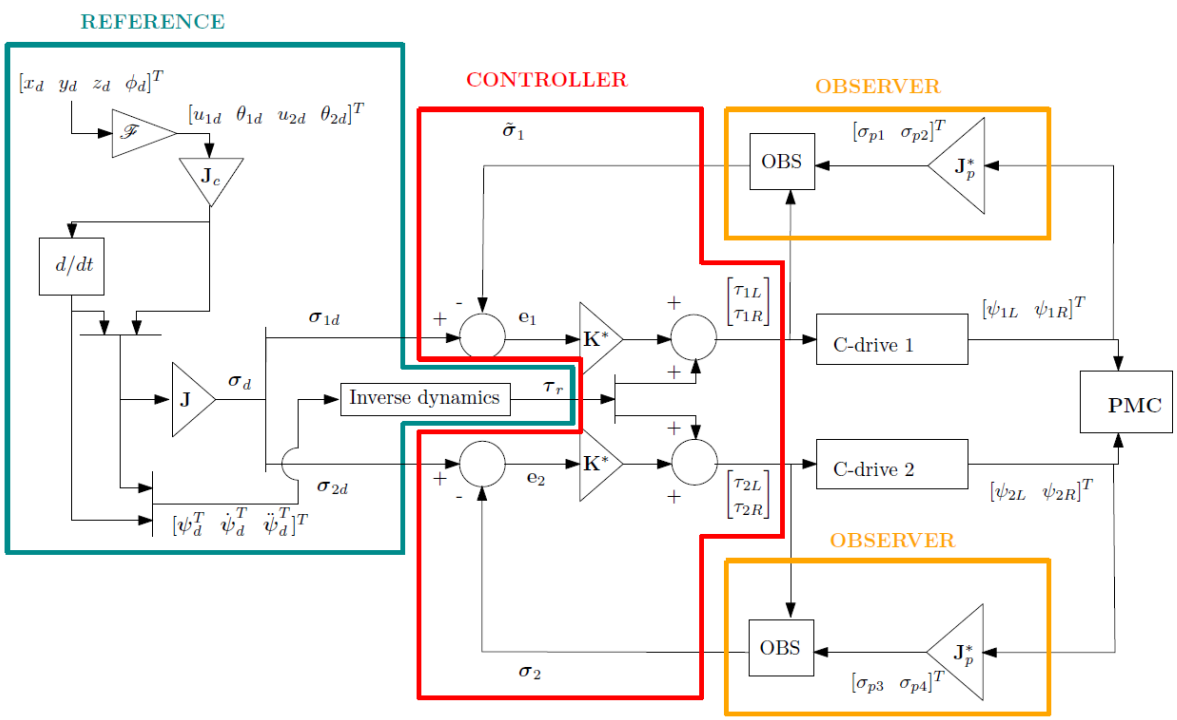

PMC control

The C-drives are controlled individually.

Minimum-order observer to estimate the velocity at the actuators.

Scheduled-PID controller
-> LQR controller

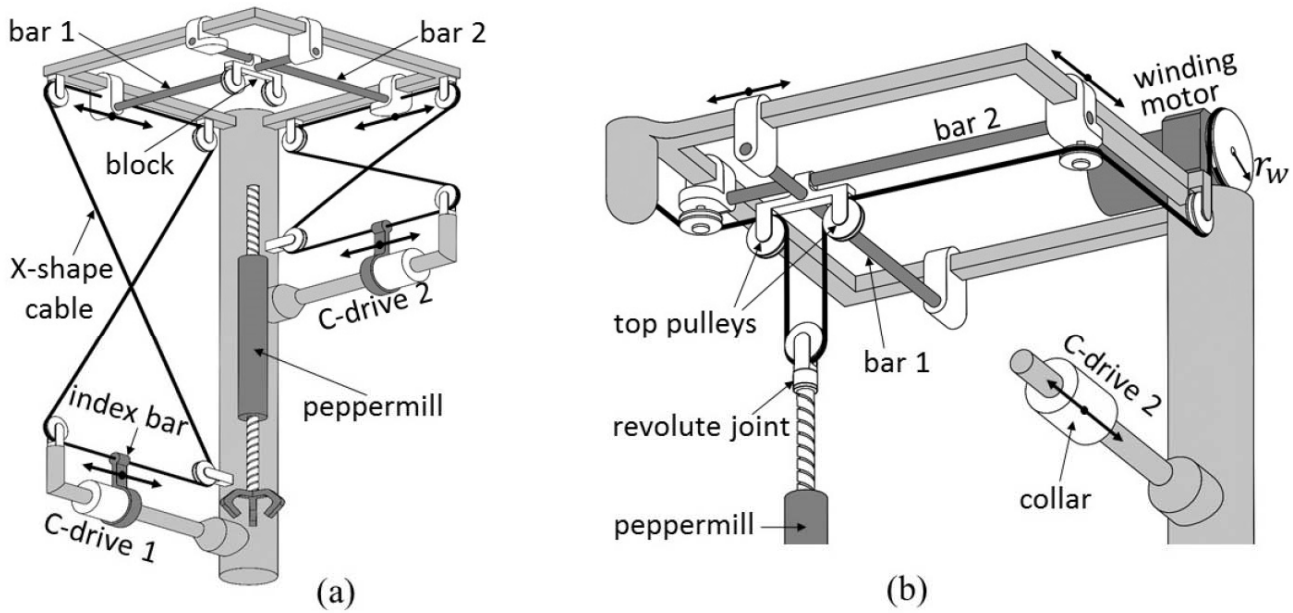

Cable-driven balancing mechanism: (a) Passive part; (b) Active part

Future steps

Virtual screw

- Peppermill
- C-drives

Dynamic balancing

- Cable-driven mechanism

Merci!

Fonds de recherche
Nature et
technologies
Québec

CRSNG
NSERC

reparti

McGill
Centre for
Intelligent Machines